SMART ELECTRIC UTILITY VEHICLES

TECHNICAL SHEET

MT15n Flatbed

MT15n Flatbed

TECHNICAL SHEET

Technical data	
Seats	2
Speed	Up to 44mph*
Turning radius	17.7ft
Weight chassis-cabin	1953lb*
Load capacity	2006lb
Towing capacity	2646lb
Brakes front & rear	Discs
Suspension front & rear	Coil springs
Vehicle warranty	2 years

Electrical data	
Motor type	Three phase asynchronous
Motor power	12,5kW
Motor torque	120Nm
Battery type	LiFePO4
Battery capacity	15.5kWh
Battery warranty	10 years
Charging	7.5A 100-240V

Dimensions	
A - Total length	144in
B - Total height	79in
C - Cabin width	55in
D - Cabin height	79in
E - Wheel base	81in
F - Front overhang	42in
G - Rear overhang	22in
H - Length flatbed	85in
I - Height flatbed	49in
J - Width flatbed	57in
Internal length flatbed	82in
Internal width flatbed	54in

* depending on the chosen transmission and/or local legislation

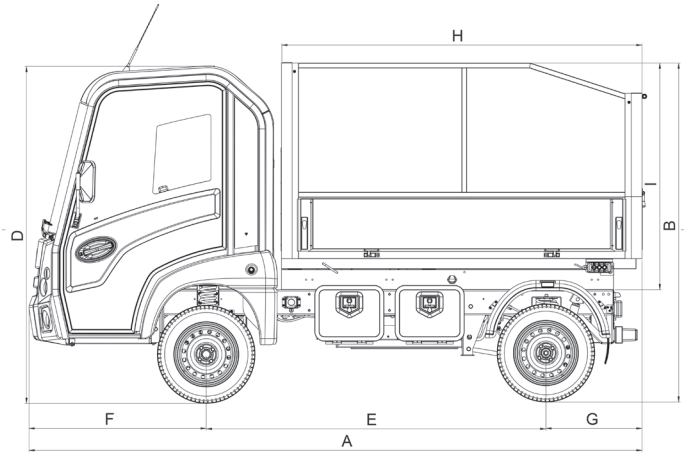

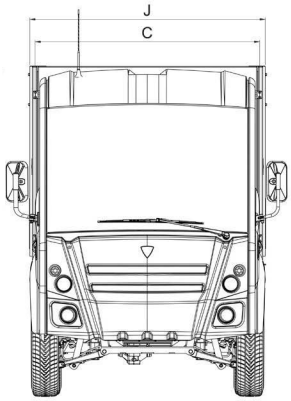

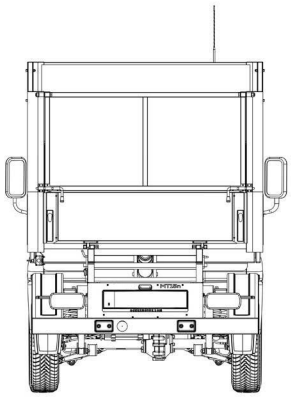

NARRO

www.narrotrucks.com

This marketing support presents the models, equipment features and configuration possibilities of Narro electric utility vehicles. All the characteristics of this document are given as and indication. Narro Trucks reserves the right to modify them without notice. Visuals may include standard or optional equipment and accesories depending on the country of sale. Technical specifications correspond to standard versions which may differ according to the country of sale. Please check with your dealer for any local specifications.